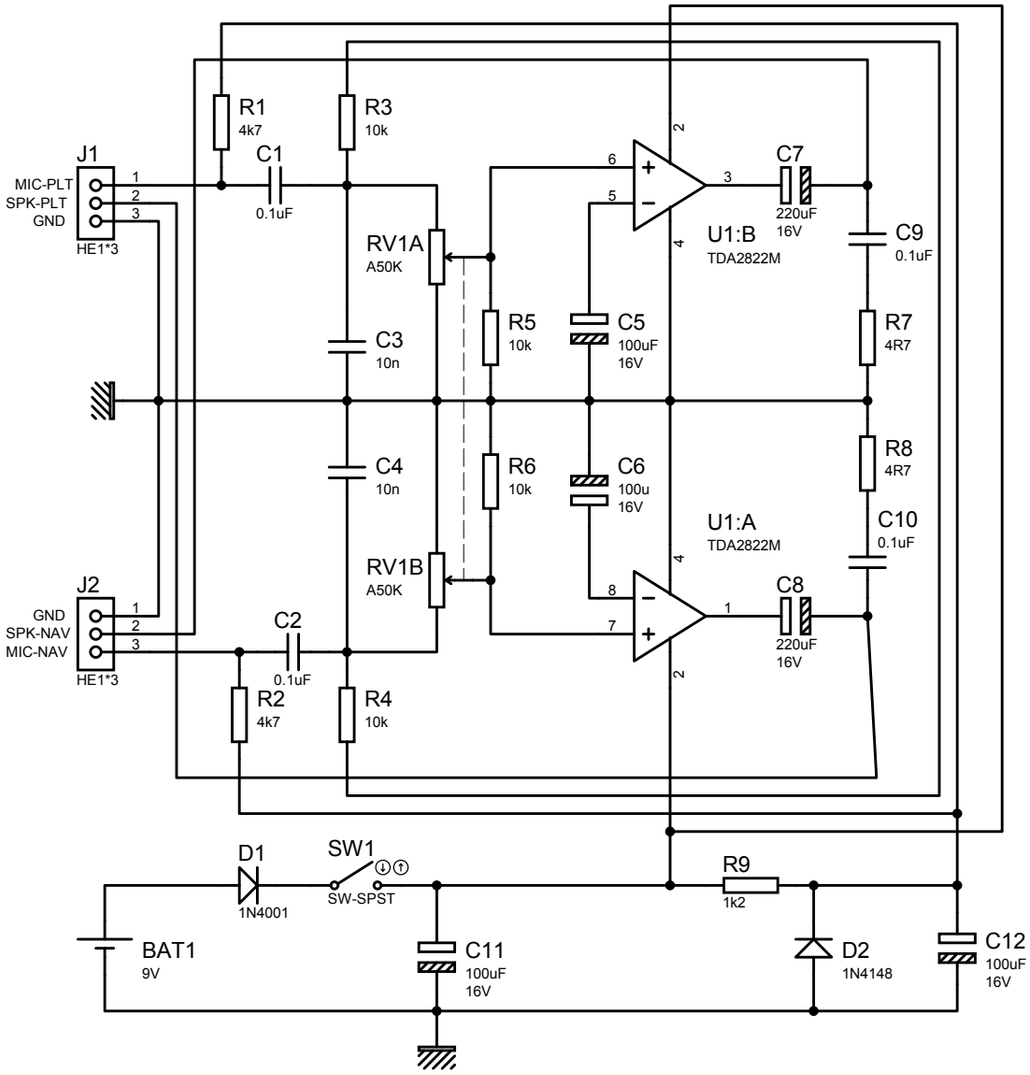

fmssp Electronic Rally Equipment	RallyCom-2Lt	DATE: 20.11.2005 PAGE: 1/1 REV :